rev:	revision text:	rev.date:	rev.by:	aprv. date:	aprv. by:
01	improved cutline	2023-04-04	MicNaeb	2023-04-04	KaiPeik
02	tolerance deleted	2023-04-04	MicNaeb	2023-04-04	KaiPeik
03	general simplification	2023-11-27	KaiGünd	2023-11-27	MicNaeb

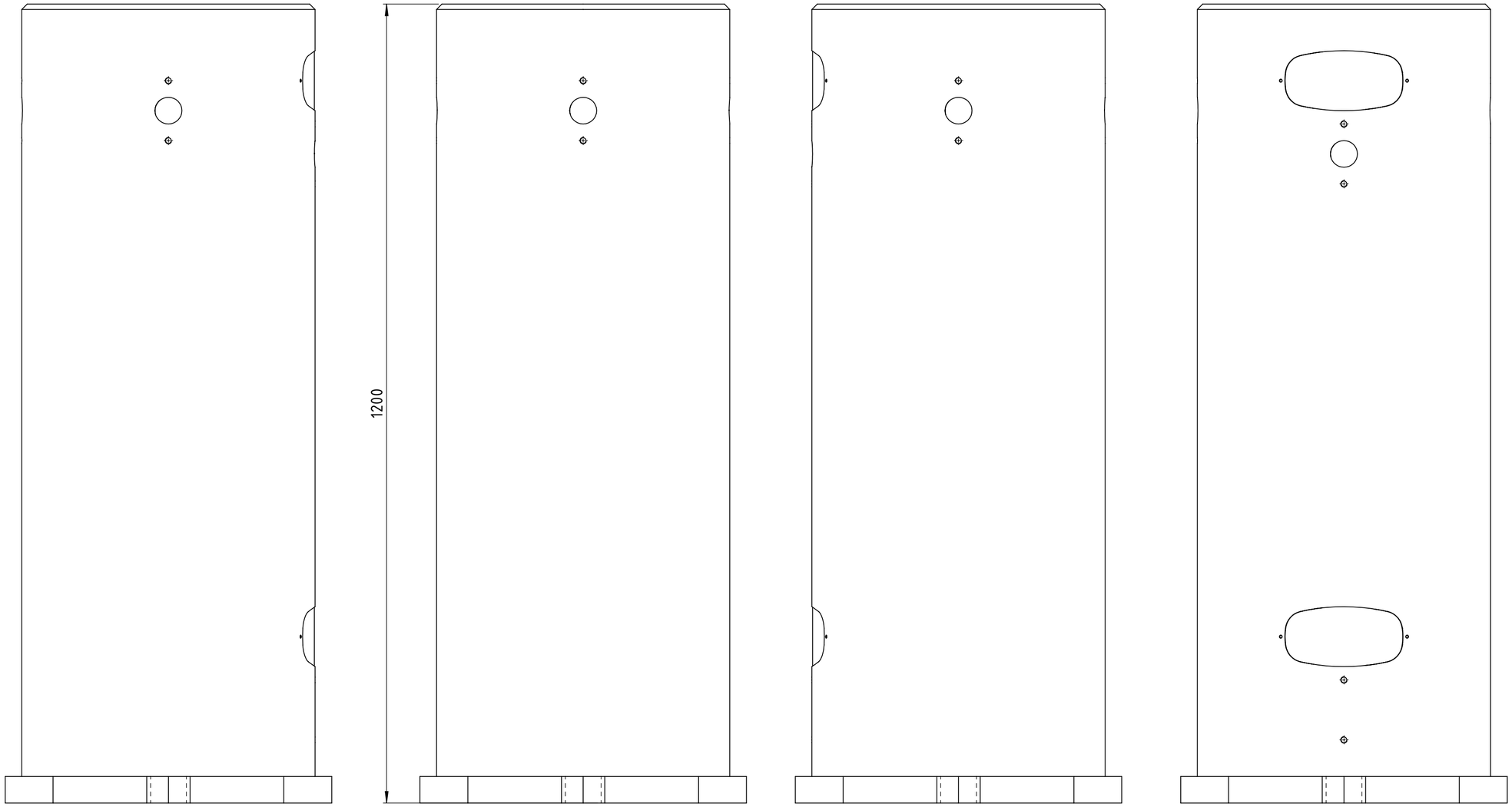

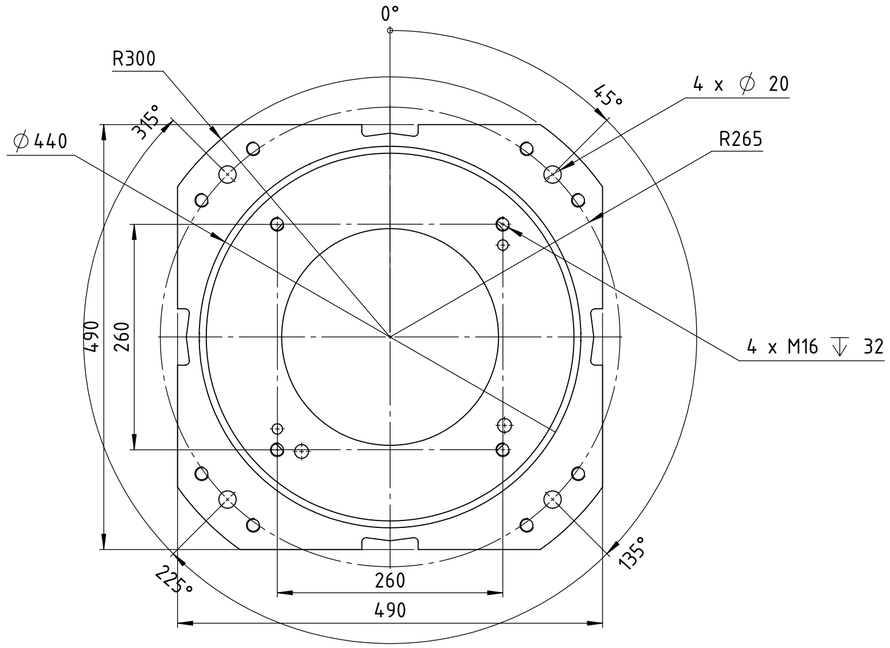

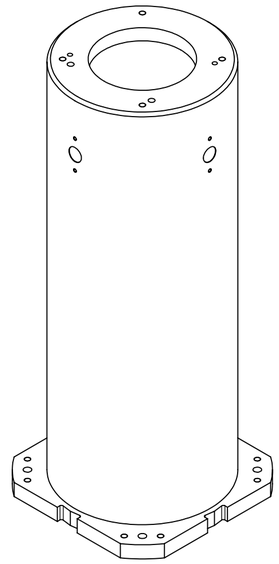

(1 : 10)

where nothing else is indicated: tolerances: DIN ISO 2768-mH welding: DIN EN ISO 13920-A edges: DIN EN ISO 13715 -0,3 -0,5 +0,3	status: Released		YASKAWA www.yaskawa.eu.com
	SAP EMEA no:	SAP AH no: 217989	
	title / description: robot stand H-1200		

dimension:		weight: 123,48 kg	
created:	2021-04-12	MicNaeb	
drawn:	2021-04-12	MicNaeb	sheet:
approved:	21.04.2021	Wagner R.	A2
drawing-no.: 0000086652-100		revision: 03	1:5 4/5

CONFIDENTIAL! The reproduction, distribution and utilization of this document as well as the communication of its contents to others without express authorization is prohibited. Offenders will be held liable for the payment of damages. All rights reserved in the event of the grant of a patent, utility model or design